OVERSTAYER

FRAMEWORK DEVICES

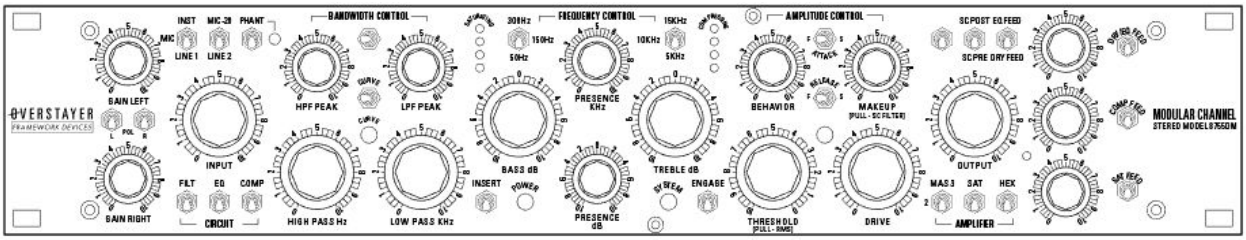


# MODULAR CHANNEL
# STEREO MODEL 8755DS
# MODULAR CHANNEL
# STEREO MODEL 8755DM

# REFERENCE
# v1.2

# SIGNAL FLOW

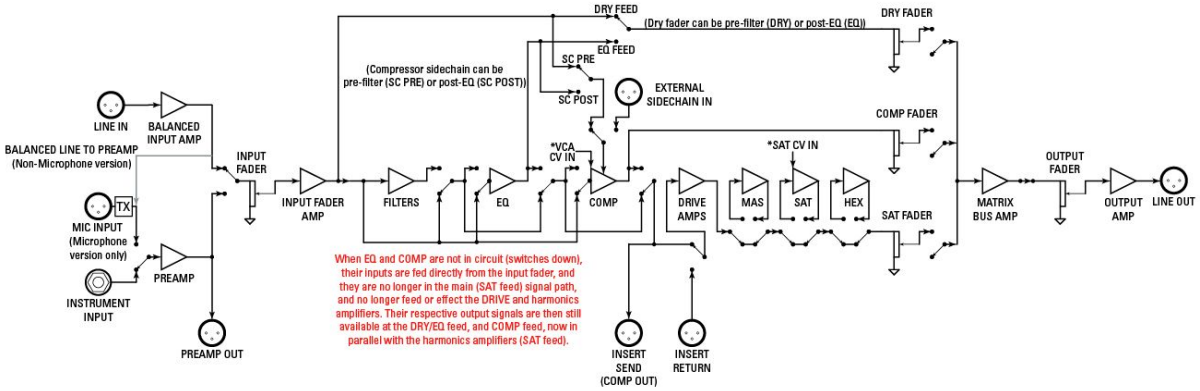


The 8755D is a stereo channel with filters, eq, compression, and harmonics stages throughout, with sophisticated routing and a series parallel mixer matrix. High quality components and circuitry are used throughout. Though the unit can get extreme, the design aesthetic is that of a console in that it is capable of handling and maintaining the fidelity of a full mix through the unit.

**Features**

- Stereo signal path
- Balanced line inputs and outputs, high impedance unbalanced instrument inputs
- Wide ranging high and low pass filters that resonate to full oscillation
- EQ featuring high and low shelves with 3 frequencies each and a fully sweepable proportional Q mid range band
- VCA compressor with peak and RMS detectors, 3 position attack and release controls, BEHAVIOR control, sidechain high pass filter, and external sidechain input
- Independent harmonics stages, engage-able in any combination
- Mixer matrix with DRY/EQ, COMPRESSOR, and full wet path SATURATED faders with mute switches allow for series and parallel routing and composited mixing

## FRONT PANEL

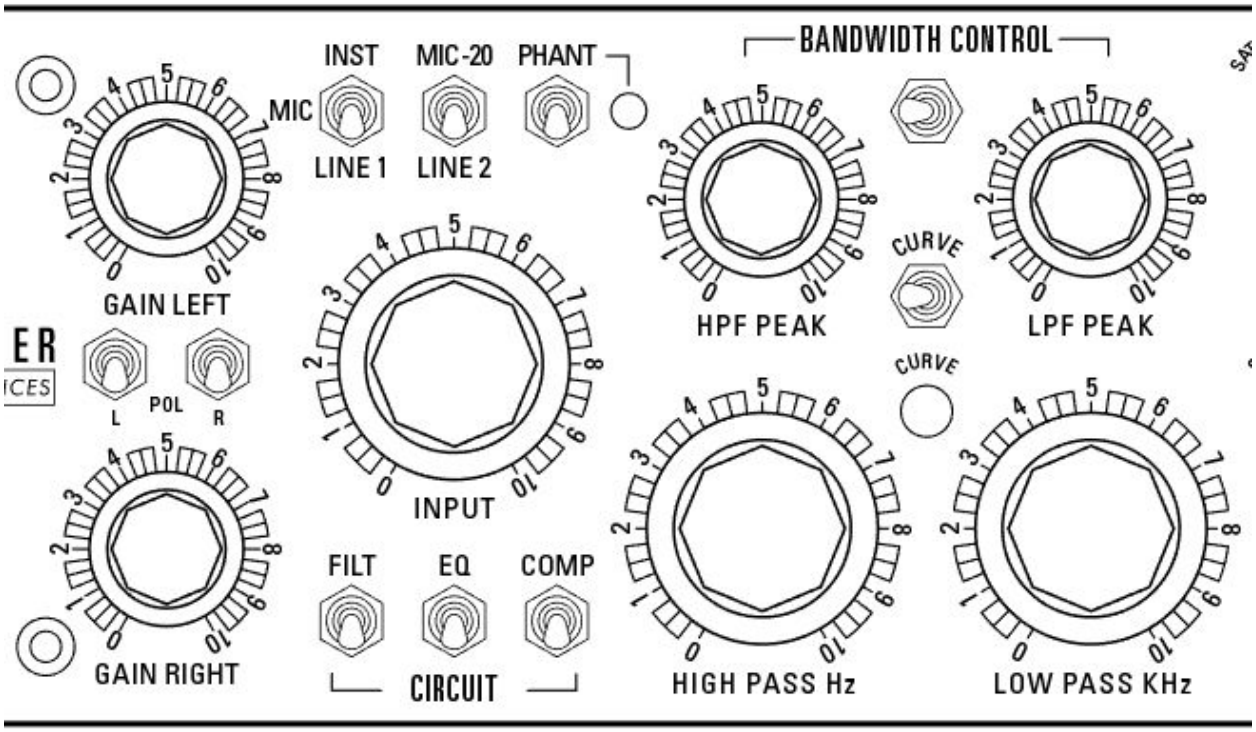


## INPUT SECTION

**GAIN LEFT/GAIN RIGHT controls -** Independent controls set the gain of the instrument/mic amp before the stereo INPUT control

**POL LEFT/POL RIGHT switch -** Set the polarity of the microphone input signals.

**INST/PRE/LINE switch (8755DS version) -** Selects the input signal. Selecting PRE, the LINE input signal is fed through the preamps. This allows the balanced line input to be controlled (and driven) with the GAIN controls at the front of the signal path.

**INST/MIC/LINE 1 switch (8755DM version) -** Selects the input signal, INST and MIC signals are fed through the preamps, so the GAIN controls are active.

**MIC-20/LINE 2 switch (8755DM version) - This switch only has effect when 'MIC' is selected on the input toggle**

Up - MIC input, PAD -20dB

Mid - MIC input, no pad

Down - LINE 2 input through the transformers (LINE IN 2 L, LINE IN 2 R on rear panel). This allows a balanced line input to be controlled (and driven) with the GAIN controls at the front of the signal path.

**PHANT switch -** Engages phantom power to the mic inputs.

**INPUT control -** Sets the level of the input signal.

**FILT switch -** Engages the filter circuit into the main signal path.

**EQ switch -** Engages the equalizer circuit into the main signal path.
**COMP switch -** Engages the compressor circuit into the main signal path.

## FILTERS

**HPF PEAK control -** Resonance control for the high pass filter, will self oscillate at settings >8.
**HIGH PASS Hz control -** Sets the frequency of the high pass filter.
**LPF PEAK control -** Resonance control for the low pass filter, will self oscillate at settings >8.
**LOW PASS KHz control -** Sets the frequency of the low pass filter.
**FLOATING switch (8755DM version) - This switch only has effect when 'MIC' is selected on the input toggle.** Routes the balanced line input through the preamplifiers directly (not through the transformers). This also allows a balanced line input to be controlled (and driven) with the GAIN controls at the front of the signal path. **Due to the design, the bypass signal has to come from after the preamplifiers, so if the GAIN controls are high, when entering bypass mode the levels can be extremely high.**
**CURVE switch -** Curve shapes the distortion response of the unit, the **default mode being on** (toggle right, LED on). This allows the power of the lower fundamentals to be maintained, but there are instances where more distortion is desired in the low end, in which case CURVE off may be more suitable.

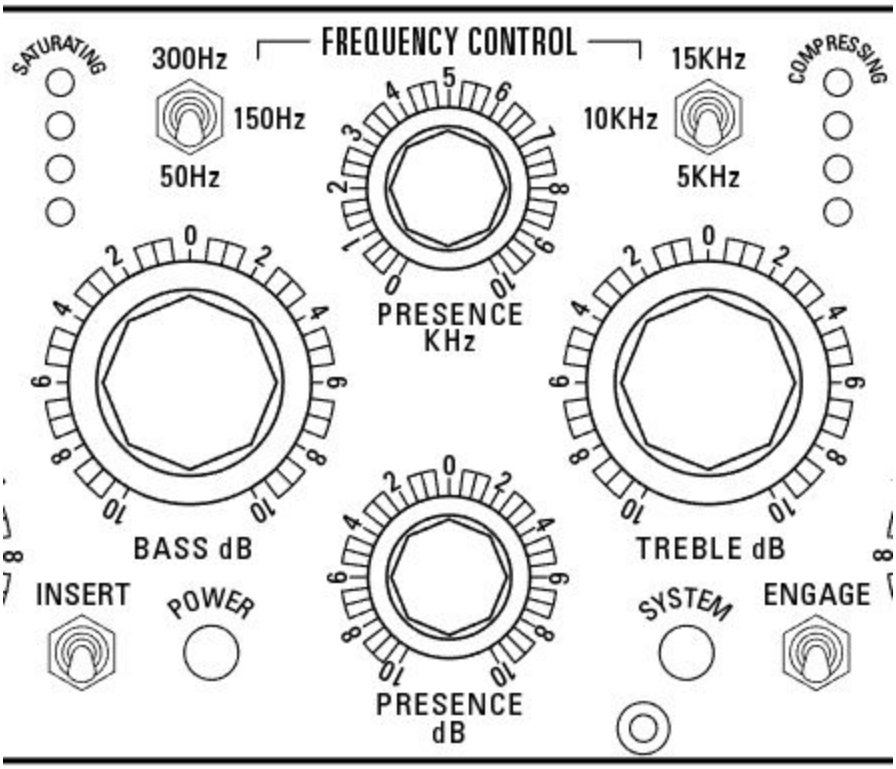


## EQUALIZER

**INSERT switch -** Engages the external insert send and return, which is after the compressor and before the DRIVE.
**300Hz/150Hz/50Hz switch -** Sets the frequency of the low shelf.
**BASS dB control -** Sets the amplitude of the low shelf.
**PRESENCE KHz control**
**PRESENCE dB control-** Sets the amplitude of the middle band.
**15KHz/10KHz/5KHz switch -** Sets the frequency of the high shelf.
**TREBLE dB control-** Sets the amplitude of the high shelf.
**ENGAGE switch -** Master bypass switch for the entire unit. Note that when the source signal is mic or instrument, the bypass signal is taken from the preamp outputs. **When the preamps are set to a high gain, there is a potential for the bypass signal to be very loud.**

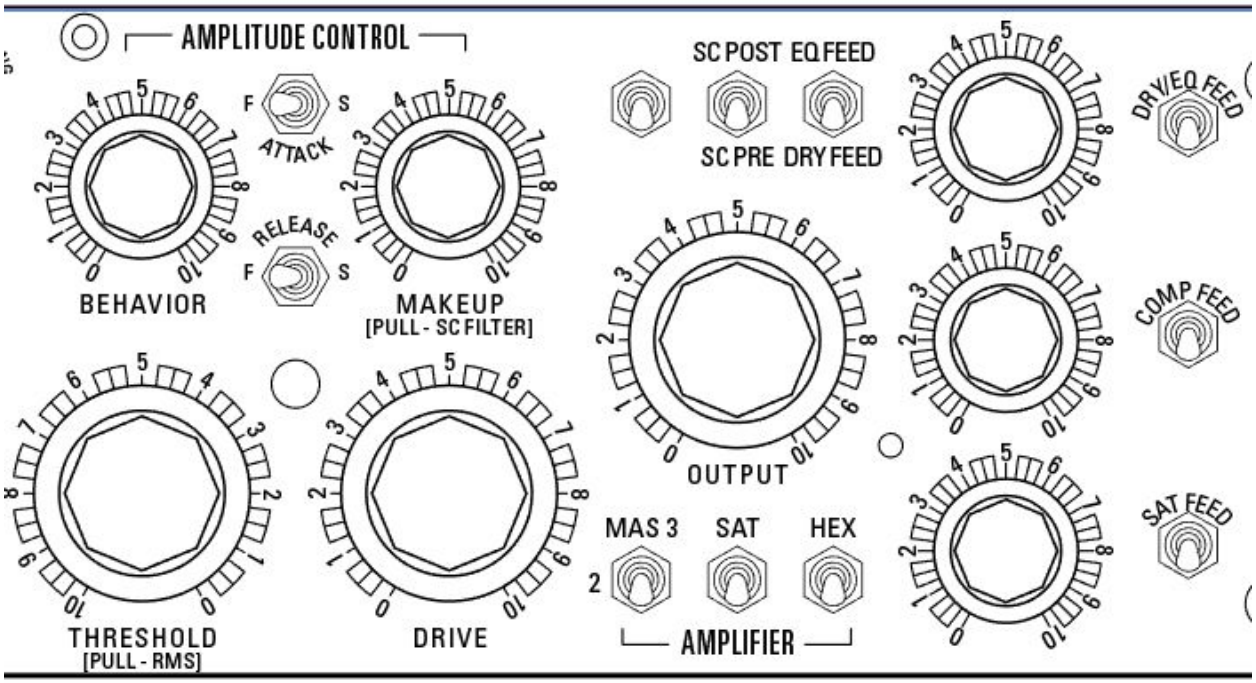


## COMPRESSOR

**BEHAVIOR control -** Magnifies the compression envelope in a unique fashion. BEHAVIOR control manipulates the hardness and envelope of the compression and can take the sound from virtually all ambience to all transients. As this control interacts with the other compression controls, it creates a large array of envelope shaping and sonic possibilities depending on the selected ratio and attack/release settings. Start with this control at '0' and ease it up to get a feel for what it does. It can create very extreme compression at high settings, as it skews not only ratio but timing (fast can get very fast, etc.)
**THRESHOLD control -** Sets the level at which compression occurs.
**RMS switch -** engages the RMS sidechain, which computes timing based on the input signal and does not use the ATTACK and RELEASE controls (they are disabled).
**ATTACK switch -** 3 position control sets the speed at which compression takes effect.
**RELEASE switch -** 3 position control sets the speed at which compression releases.
**MAKEUP control -** Sets the makeup gain of the compressor, unity point at '5'. Increasing beyond 5, especially with BEHAVIOR turned up, **can produced extremely high gains - which is intentional as the 'clean' vca actually distorts beautifully.**
**SC FILTER switch -** Engages a high pass filter on the sidechain signal, allowing the low end through more as the detector sees less low end.
**FLOATING SWITCH RIGHT switch -** This switch has been assigned to engage a final output ceiling, a special type of limiting after the FEED faders and before the final output control. This can be used (or abused) to pull together the composite fader signals, but it's action can be very limiting to the point where there are no dynamics, and high distortion. This should be used

sparingly at first to get a feel for how it works, and if accidentally left on could potentially create unwanted artifacts.

**The fixed ceiling correlates to the following positions on the OUTPUT control with converters calibrated to -18dBFS.**

'**6**' 7dB headroom
'**7**' 4dB headroom
'**8**' 0.1dB headroom

**SC POST/SC PRE switch -** 3 position, selects the source of the compressor's sidechain, either pre-filter, or post-eq. The middle position engages the external sidechain feed (XLR on the rear panel). If nothing is plugged in to the external feed, this effectively **bypasses the compression.**

## HARMONICS/SATURATION

**DRIVE control -** In conjunction with the harmonic amplifier switches, controls the amount of harmonics and saturation, 5 is unity. The harmonics stages can be used in any combination, and DRIVE is always active, even if no stages are engaged. The stages are arranged from highest headroom to lowest headroom, so they can each impart character when used together.
**MAS 3/MAS 2 switch -** 3 positions, engages MAS circuitry with either stronger 2nd harmonic or stronger 3rd harmonic.
**SAT switch -** Engages a rich saturation stage.
**HEX switch -** Engages a stage that goes deep into distortion.

## FEED MIXER

**EQ FEED/DRY FEED switch -** Sets the source of the DRY/EQ FEED to either the pre-filter signal (dry) or the post-EQ signal.
**DRY/EQ FEED control -** Sets the level of the dry or eq signal, depending on the status of the EQ FEED/DRY FEED switch.
**DRY/EQ FEED switch -** Mute control for the DRY/EQ FEED.
**COMP FEED control -** Sets the level of the compressor feed, which is always fed from the output of the compressor, regardless of whether the compressor circuit is engaged into the main path (with the COMP switch).
**COMP FEED switch -** Mute control for the COMP FEED.
**SAT FEED control -** Sets the level of the saturated feed, which is the full signal path through the DRIVE and harmonics/saturation stages.
**SAT FEED switch - Mute control for the SAT FEED.**
**Front Panel Trimmer (Access above HEX) -** Adjusts the LEFT channel - be careful in MIC, PREAMP mode. Reset with -30 dBFS tone, INPUT 10, OUTPUT 10, DRY FEED (only) 10

## REAR PANEL

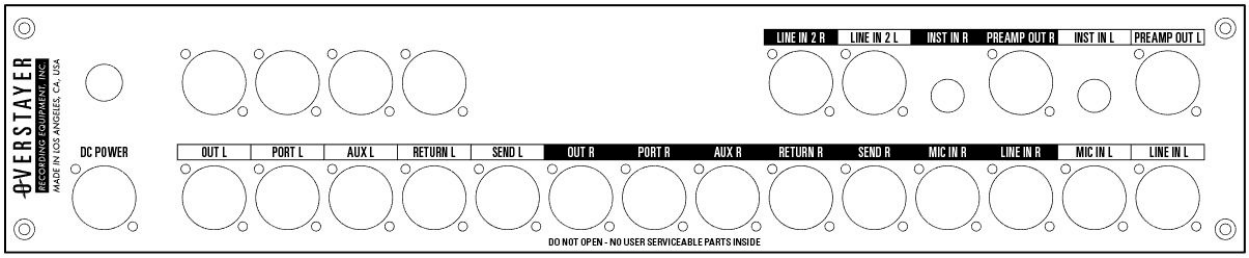


**PREAMP OUT L/R -** Direct output of the preamps
**INST IN L/R -** High impedance unbalanced TS inputs that feed directly into the preamps
**LINE IN 2 L/R (8755DM only) -** Balanced line input that feeds the input transformers
**LINE IN L/R -** Balanced line input
**MIC IN L/R (8755DM only) -** Transformer coupled microphone input
**SEND L/R -** Insert send
**RETURN L/R -** Insert return
**AUX L/R -** Expansion port
**PORT L/R -** Expansion port
**OUT L/R -** Balanced line output, leave pin 3 floating when driving unbalanced loads
**EXT SC IN -** External sidechain feed for the compressor
**DC POWER**